CKT	FUNCTION	CKT	FUNCTION
23	12V POWER (KEY ON)	505	TACH
29	12V POWER (STARTER CRANKING)	508	ENGINE BRAKE ENABLE SIGNAL
68	LOW COOLANT PROBE SIGNAL	509	STOP ENGINE SIGNAL
115	LOW COOLANT SIGNAL	524	PARKING BRAKE-IDLE TIMER
150	ECM GROUND	528	SHUTDOWN OVERRIDE
A150	LOW COOLANT PROBE GROUND	531	BRAKE/CLUTCH "ON"
211	JAKE BRAKE ATEC SIGNAL	541	CRUISE SET
223	JAKE BRAKE	542	CRUISE NOT SET
224	JAKE BRAKE - FRONT	543	BRAKE/CLUTCH "OFF"
225	JAKE BRAKE - REAR	A543	BRAKE "OFF"
239	DASH GROUND	544	CRUISE NOT RESUME
240	ECM POWER	545	CRUISE RESUME
241	ECM POWER	555	CRUISE "ON" SIGNAL
242	12V POWER (KEY ON, FUSED)	556	VEHICLE SPEED SIGNAL (+)
289	JAKE BRAKE	557	VEHICLE SPEED SIGNAL (-)
298	12V POWER (CONSTANT)	558	CRUISE/PRESSURE SWITCH GROUND
354	CRUISE CONTROL "ON" LIGHT	900	DATA LINK (+)
417	THROTTLE POSITION SIGNAL	901	DATA LINK (-)
419	"CHECK ENGINE" LIGHT	902	CRANK POSITION SIGNAL
438	"STOP ENGINE" LIGHT	916	THROTTLE POSITION SENSOR POWER
439	IGNITION	952	THROTTLE POSITION SENSOR GROUND
451	DIAGNOSTIC SIGNAL	953	SWITCH GROUND
		972	TACH

A	MCD	MS	SCC			98-10-00
	DPH	BG	B-7	REPLACED CB'S W/15 A FUSES		00017-03
B	NDP	MS	SCC			53-02-00
	NDP	BG	A-5	REVISED JAKE INSTL		30339-02
C	NDP	MS	SCC			53-02-00
	NDP	BG	A-5	REVISED JAKE INSTL		30339-02
H	NDP	MS		+		53-21-92
	NDP	BG	B-5	CORRECTED PIN CALLOUTS		12H1E

D	DX	MS			REV FOR NEW LIGHT BAR	09-04-00
	MNH	BG	B-2			35909-08
E	DPH	MS		+		06-20-01
	DPH	DX	C-2	3 AMP FUSE WAS 15 AMP		00001
F	MNH	MS	A/C	+		10-03-01
	MNH	BG	B-4	1) REV DIAGNOSTIC CONN		04179-05
			B-4	2) ADD DIEGA DATA LINK CONN		
G	NDP	MS		+		12-21-92
	NDP	DX	C-5	CORRECTED PIN CALLOUTS ON FIREWALL CONNECTOR		12H1E

NOTES:

1) SCHEMATIC FOR DETROIT DIESEL DDECII ENGINE WITH OPTIONAL JAKE BRAKE, SHUTDOWN SYSTEM AND IDLE SHUTDOWN TIMER

2) RELAY SHOWN IN NON-ENERGIZED POSITION

3) PRESSURE SWITCHES SHOWN IN NON-PRESSURIZED POSITION

4) PARKING BRAKES ARE RELEASED BY PRESSURE IN THE SYSTEM
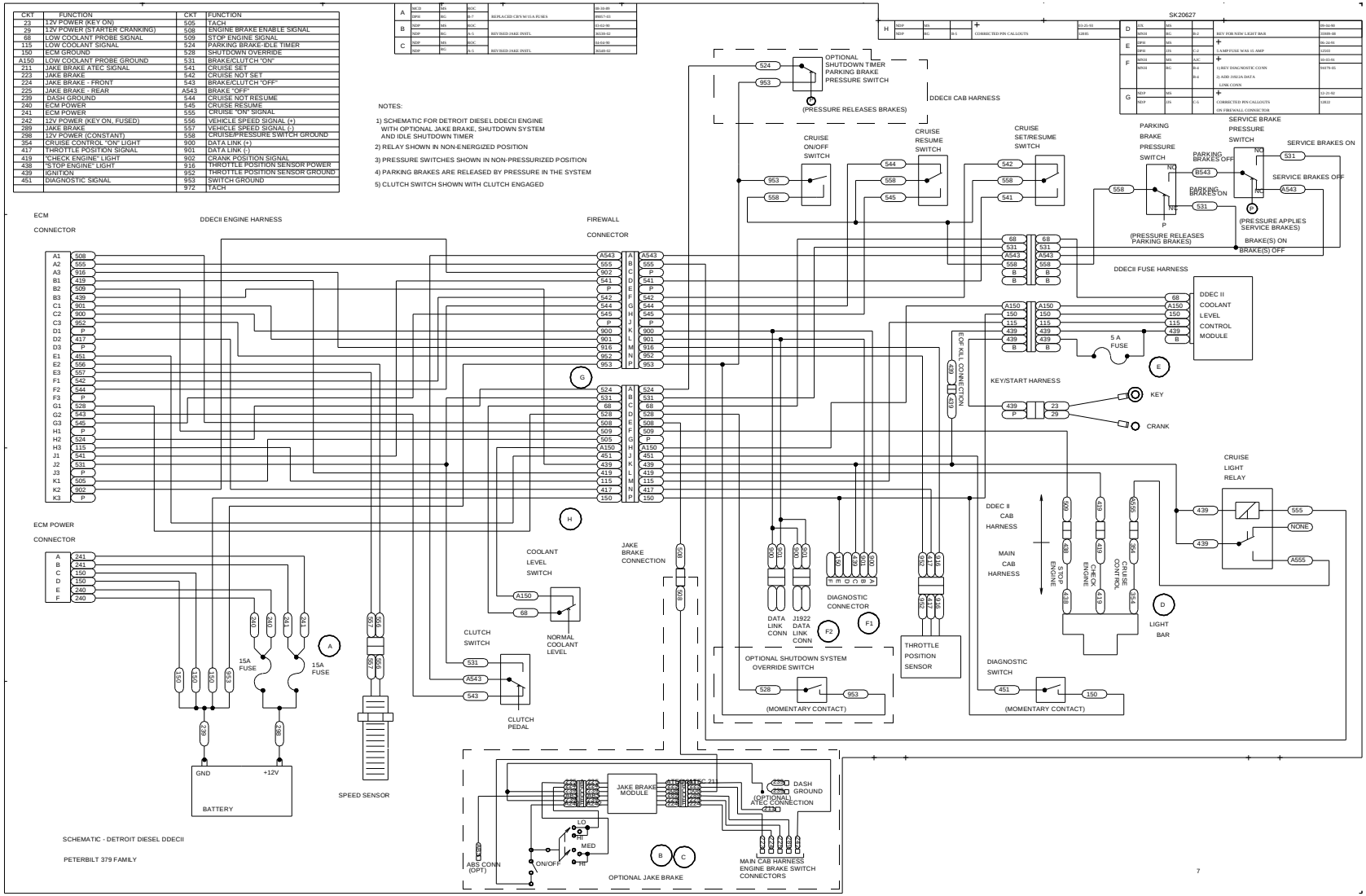
5) CLUTCH SWITCH SHOWN WITH CLUTCH ENGAGED